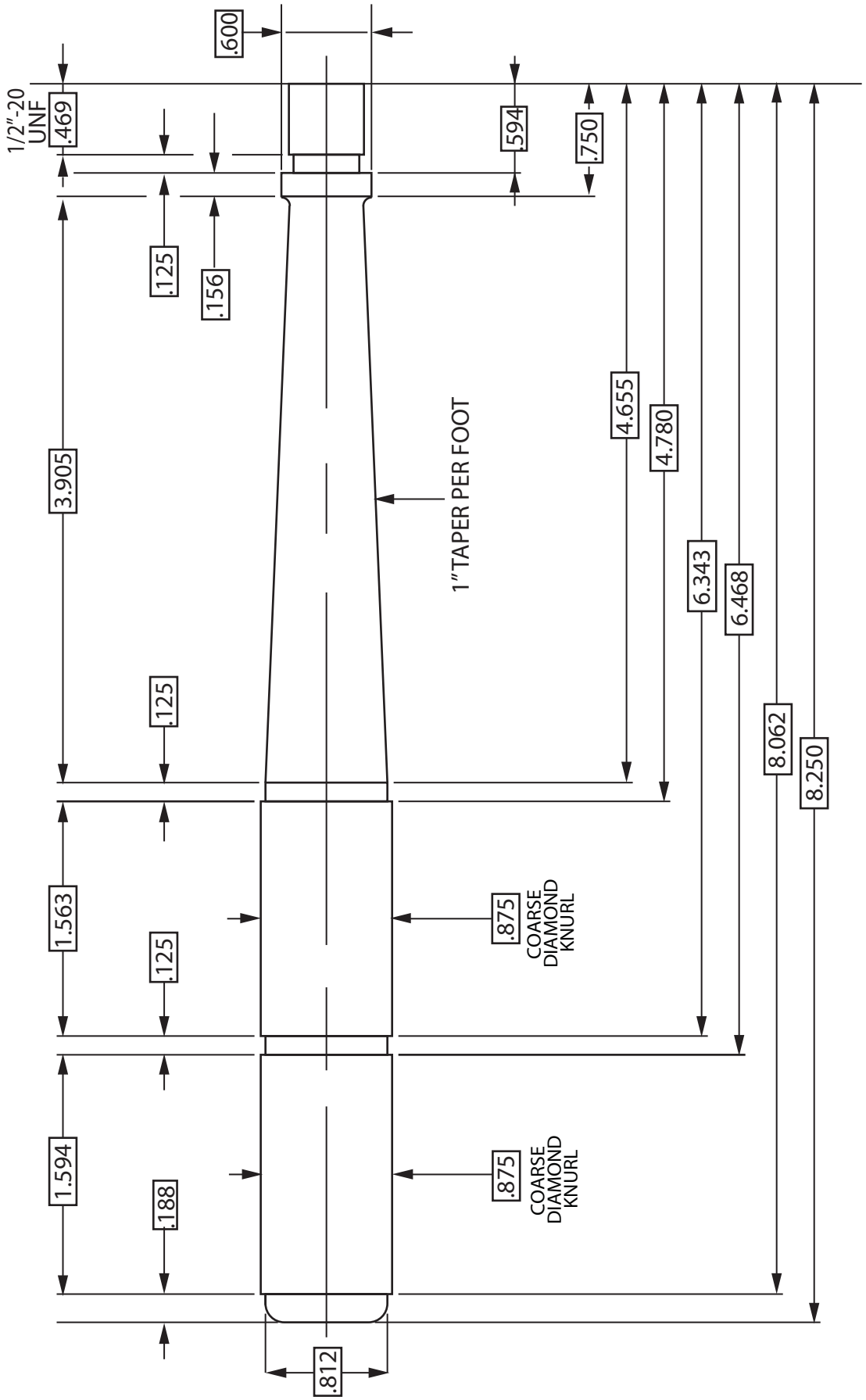
1/2"-20
UNF
.469
.600
.125
.156
.594
.750
3.905
4.655
4.780
6.343
6.468
8.062
8.250
1"TAPER PER FOOT
.125
1.563
.125
.875
COARSE
DIAMOND
KNURL
1.594
.188
.875
COARSE
DIAMOND
KNURL
.812

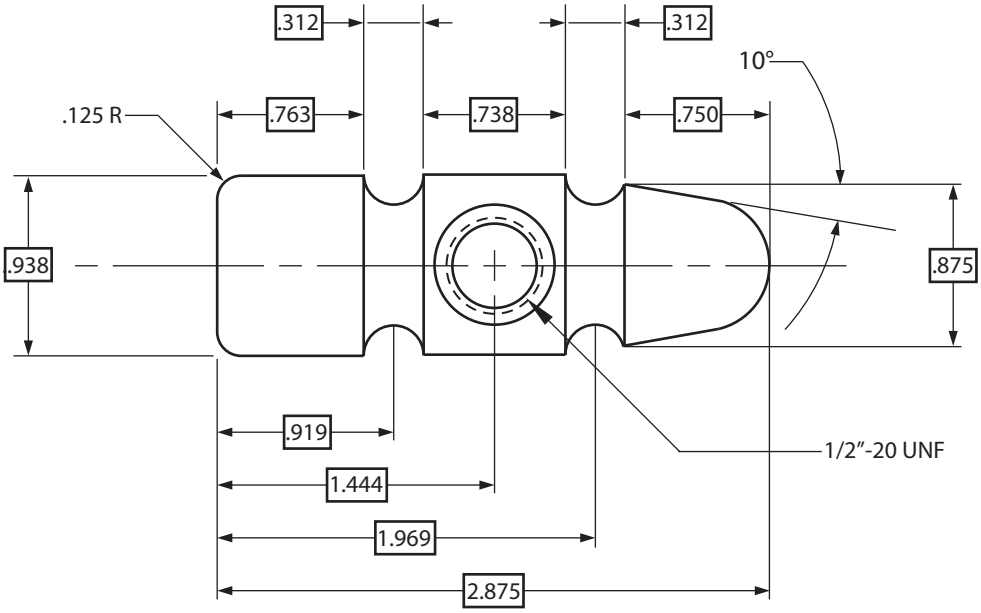
.312
.312
10°
.125 R
.763
.738
.750
.938
.875
.919
1/2"-20 UNF
1.444
1.969
2.875

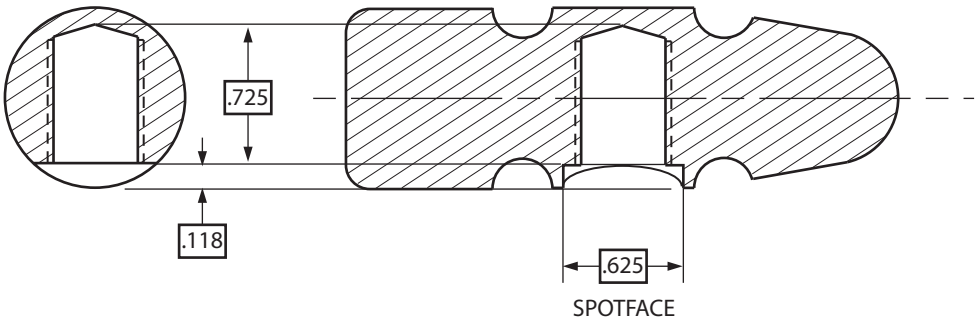
.725
.118
.625
SPOTFACE